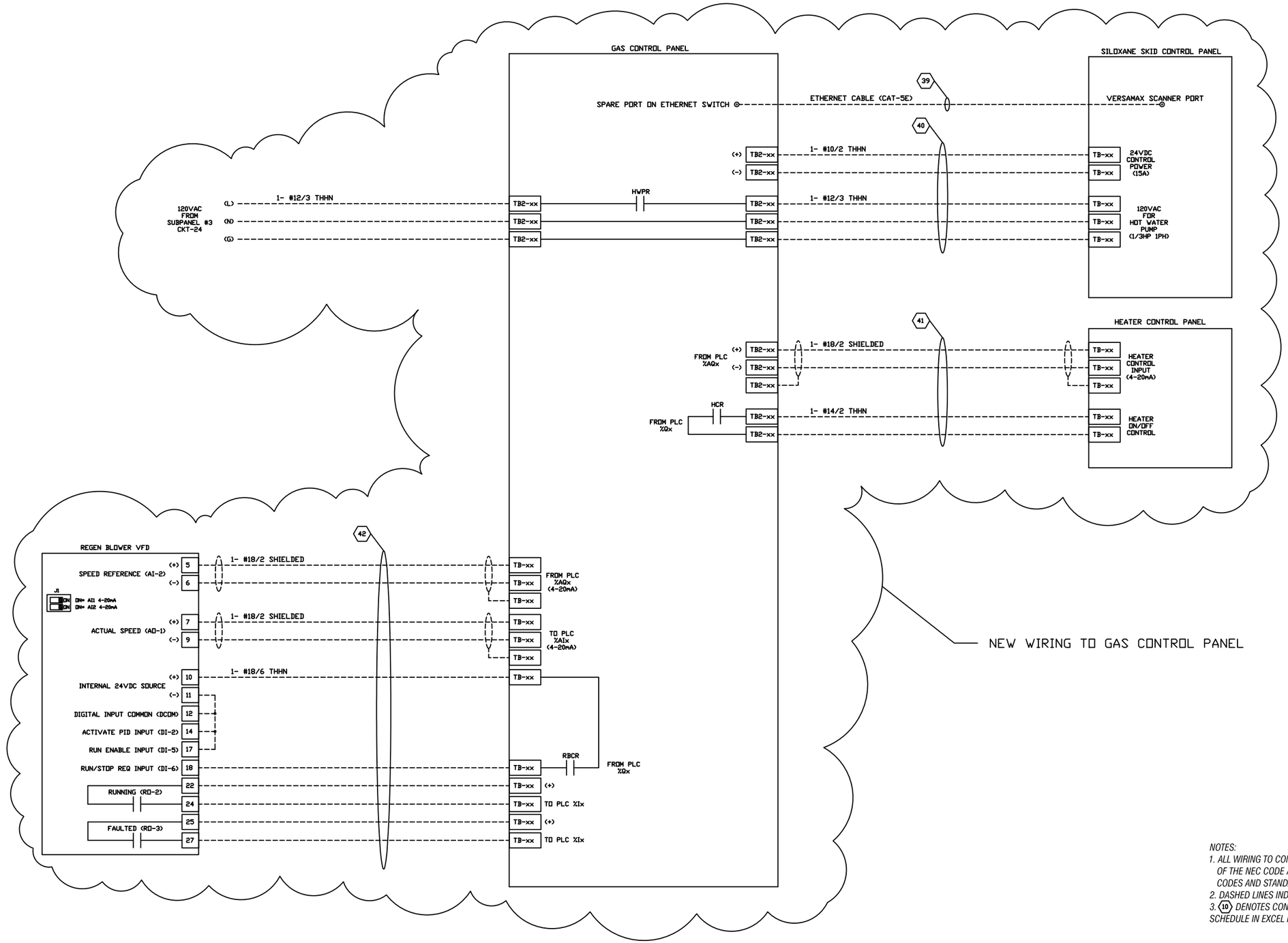


NOTES:
1. ALL WIRING TO CONFORM TO THE LATEST EDITION OF THE NEC CODE AND ALL APPLICABLE LOCAL CODES AND STANDARDS.
2. DASHED LINES INDICATE FIELD WIRING
3. (10) DENOTES CONDUIT NUMBER, SEE CONDUIT SCHEDULE IN EXCEL FORMAT.

| NO. | REVISIONS | DATE | BY |
|---|---|---|---|

THIS DRAWING AND THE DESIGNS, DETAILS AND/OR ENGINEERING INFORMATION CONTAINED HEREON ARE THE PROPRIETARY PROPERTY OF ARIA ENERGY AND ARE NOT TO BE REPRODUCED OR USED EXCEPT FOR THE PURPOSE FOR WHICH THEY HAVE BEEN FURNISHED. ALL RIGHTS OF DESIGN AND INVENTION ARE HEREBY RESERVED.

aria energy
46280 DYLAN DRIVE
NOVI, MICHIGAN 43377
(248) 380-3920

PROJECT: LFGTE FACILITY - COVENTRY, VERMONT

DRAWING TITLE: GAS SYSTEM POINT TO POINT

| DRAWN BY: | DATE: | CAD DRAWING NO.: | DRAWING NO.: |
|---|---|---|---|
| JG | 7/24/15 | | E2 |
| CHECKED BY: | SCALE: | SHEET NO.: | |
| | NONE | | |