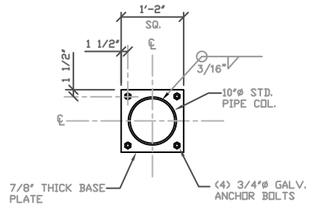

BASE PLATE B/F1
3/4"=1'-0"

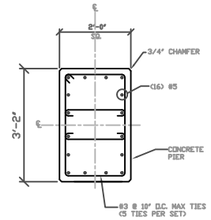

PIER SECTION F/F1
3/4"=1'-0"

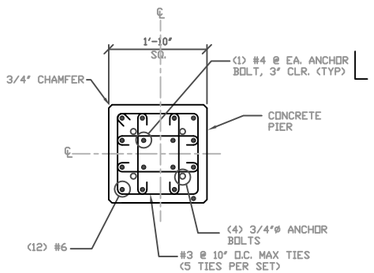

PIER SECTION C/F1
3/4"=1'-0"

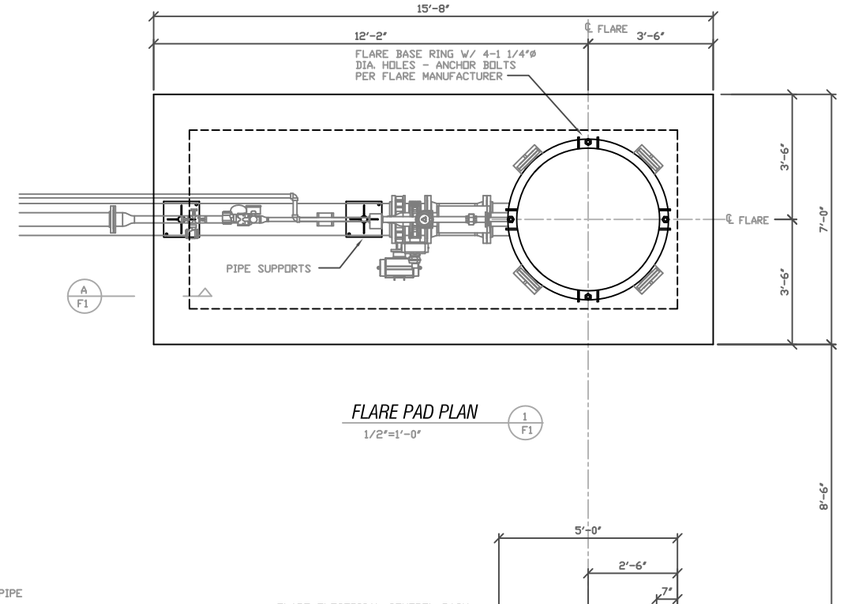

FLARE PAD PLAN 1/F1
1/2"=1'-0"

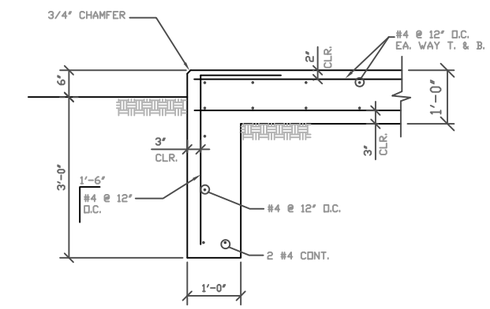

PAD SECTION A/F1
3/4"=1'-0"

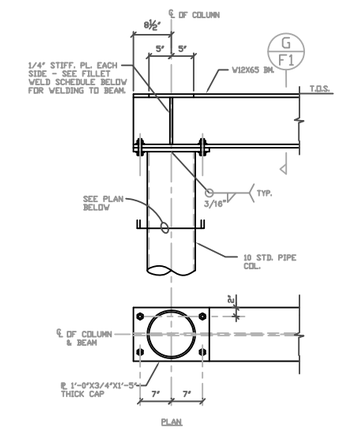

BEAM TO COLUMN H/F1
1"=1'-0"

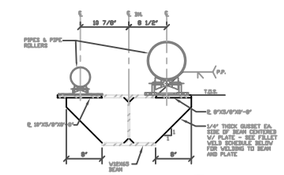

PIPE BRIDGE BEAM G/F1
1 1/2"=1'-0"

FILLET WELDS FOR STIFFENER PLATES		
PLATE THICKNESS	MINIMUM SIZE OF WELD	MAXIMUM SIZE OF WELD
1/4" OR LESS	1/8"	1/4"
OVER 1/4" TO 1/2"	3/16"	PL. THICKNESS - 1/16"
OVER 1/2" TO 3/4"	1/4"	PL. THICKNESS - 1/16"
OVER 3/4" TO 1 1/2"	5/16"	PL. THICKNESS - 1/16"

* WELD SIZE NEED NOT EXCEED THE THICKNESS OF THE THINNER PART JOINED.

FILLET WELD SCHEDULE
N.T.S.

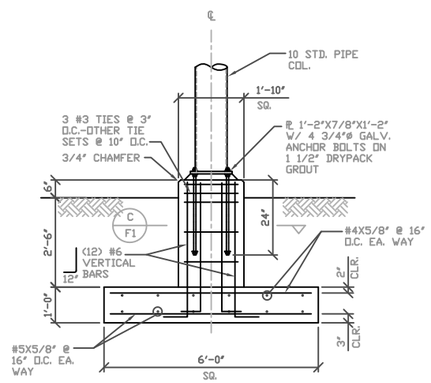

PIPE BRIDGE FOOTING E/F1
1/2"=1'-0"

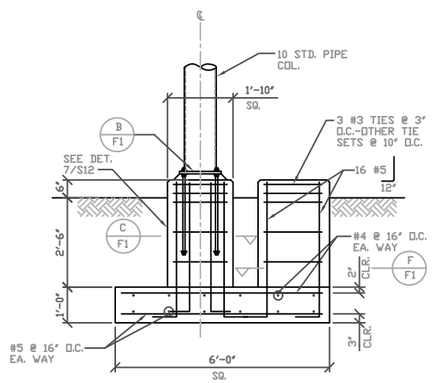

PIPE BRIDGE FOOTING D/F1
1/2"=1'-0"

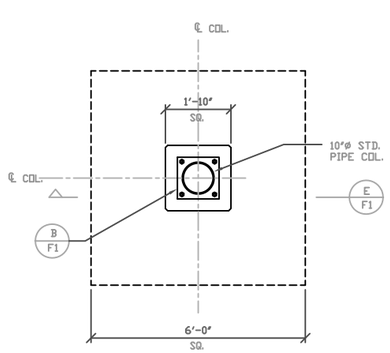

PIPE BRIDGE FOOTING PLAN
1/2"=1'-0"

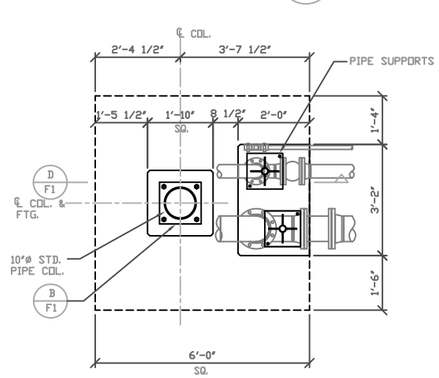

PIPE BRIDGE FOOTING PLAN
1/2"=1'-0"

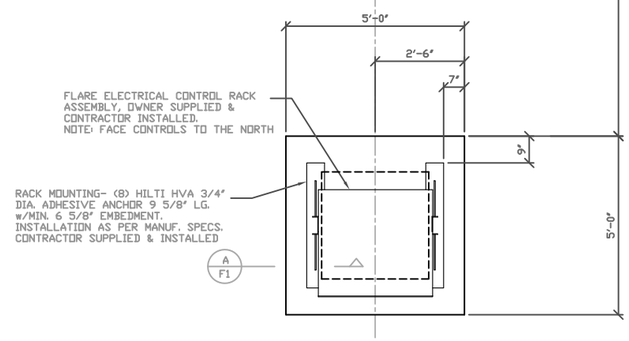

FLARE CONTROL RACK PAD PLAN 2/F1
1/2"=1'-0"

FOR BID ONLY -
NOT FOR CONSTRUCTION

NO.	REVISIONS	DATE	BY

THIS DRAWING AND THE DESIGNS, DETAILS AND/OR ENGINEERING INFORMATION CONTAINED HEREON ARE THE PROPRIETARY PROPERTY OF ARIA ENERGY AND ARE NOT TO BE REPRODUCED OR USED EXCEPT FOR THE PURPOSE FOR WHICH THEY HAVE BEEN FURNISHED. ALL RIGHTS OF DESIGN AND INVENTION ARE HEREBY RESERVED.

aria energy
46280 DYLAN DRIVE
NOVI, MICHIGAN 43377
(248) 380-3920

PROJECT: LFGTE FACILITY - COVENTRY, VERMONT
DRAWING TITLE: FLARE FOUNDATION & PIPE BRIDGE DETAILS

DRAWN BY: JG	DATE: 7/21/15	CAD DRAWING NO.:	DRAWING NO.: F1
CHECKED BY: KS	SCALE: AS NOTED	SHEET NO.:	