EXHIBIT VEC-KS-1

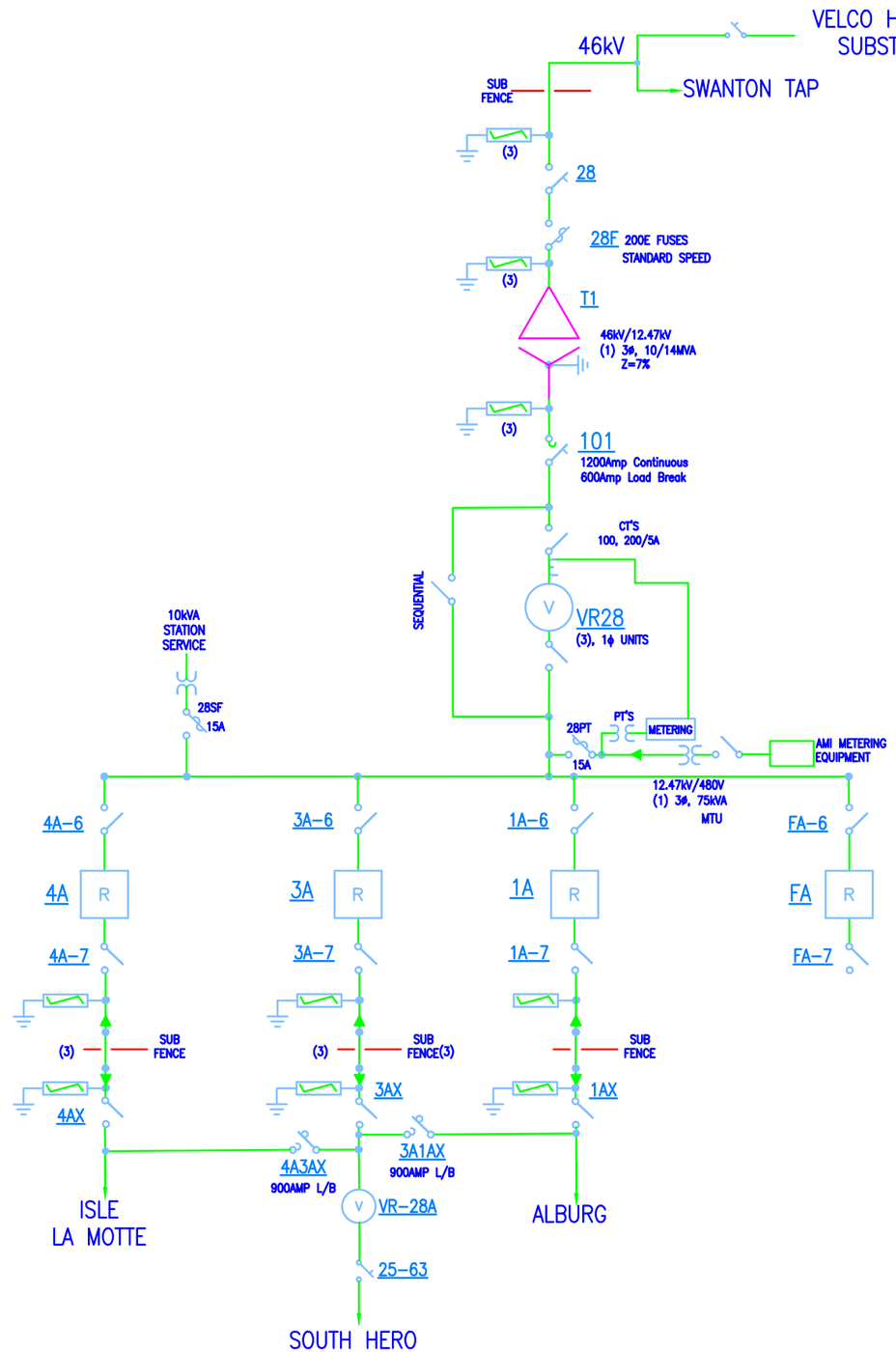

REV	DATE	REVISION DESCRIPTION	DRN	CKD

DES: HA DRN: RC
CKD: DRD SCALE: NONE
DATE: 06/02/08

VERMONT ELECTRIC COOP
JOHNSON, VT
SOUTH ALBURG SUBSTATION NO. 28
ONE-LINE DIAGRAM

DWG. NO. 028-100 REV 0

VERMONT ELECTRIC CO OP INC
the co-op advantage
energy smart today

NO.	DATE	DESCRIPTION	BY	CK'D

NOT FOR CONSTRUCTION PRELIMINARY PLANS

ALBURGH NO.28 SUBSTATION

ALBURGH, VT

SHEET TITLE
SOUTH ALBURGH SUB. CONCEPT ONE-LINE

STATION ONE-LINE

DRAWN BY	DATE
RJP	DEC. 2013
CHECKED BY	VEC PROJECT #
RJP	2014088828
PROJ. ENG.	VEC ARCHIVE #
VEC	

SHEET NUMBER

OL

SHEET OF